Obstacle Detection Using Image Processing Techniques

Omar Mones*, Amr Sayed*,
Zakaria Shamseldin Eleila*, Karim Hassan Ali *, Mohammed Hany * and AbdElRahman Mahmoud Refaat Gad*
*German University in Cairo (GUC), Egypt
Emails: omar.hendawy@student.guc.edu.eg, amr.behery@student.guc.edu.eg, zakaria.eleila@student.guc.edu.eg, Karim.ali@student.guc.edu.eg, mohammed.hany@student.guc.edu.eg, abdelrahman.gad@student.guc.edu.eg

I. Introduction

Autonomous vehicles have attracted significant attention over the past two decades, with extensive research devoted to addressing the many challenges facing the autonomous driving industry. Among these challenges, perception remains one of the most critical, as it concerns how a vehicle interprets and understands its surrounding environment. A key aspect of perception is obstacle detection.

This project aims to design and implement a computer vision system using a Raspberry Pi 5 and a 5 MP camera module to detect a colored cube representing an obstacle with dimensions of 10 × 10 cm. The system will employ image processing techniques to identify the cube based on its color and geometric features. In addition to detection, the system will estimate the cube's position within the image frame and approximate its distance from the camera. The ultimate objective is to develop a reliable real-time detection framework that can later be integrated with robotic control or autonomous navigation systems.

This paper is divided as follows: Section II shows previous literature on this topic, section III shows the used hardware system and the circuit diagram, section IV shows the simulations done on the system and comparing it to real life testing and section V shows the concluding thoughts on the results of the project.

II. Literature Review

The topic of obstacle detection using image processing techniques has been tackled by different papers. In [1], lanes, street signs and obstacles were detected using a multistage pre-processing technique. The images were then further processed where Canny edge detection and Hough transform techniques were used to detect the required objects. In [2], a Water Obstacle Detection network based on Image Segmentation (WODIS) was developed where it utilized an encoder network, an Attention Refine Module (ARM) and a Feature Fusion Module (FFM). In [3], a depth camera is used for omni-directional obstacle detection. A method applying region growth for depth image and a fast inpainting method for depth image was proposed to extract and repair the obstacle regions in the depth images. After that, an improved method of iterative normalized cut was used to cluster and segment fragmentary and irregular obstacle regions to generate the complete obstacle regions which are viewed using a three-dimensional visualization method. In [4], a reconstruction module that can be used with many existing semantic segmentation networks and that is trained to recognize and reconstruct the drivable surface from a small bottleneck was proposed where any poor reconstruction of the road surface was attributed to the existence of obstacles in the vehicle's way. In [5], two different optimization techniques (Ant Colony Optimization (ACO) and Bee Colony Optimization (BCO) algorithms) were used for edge identification to help in obstacle detection.

III. Hardware Design and Implementation

In this section, the hardware components, in addition to the circuit diagram are going to be shown.

A. Vehicle Assembly

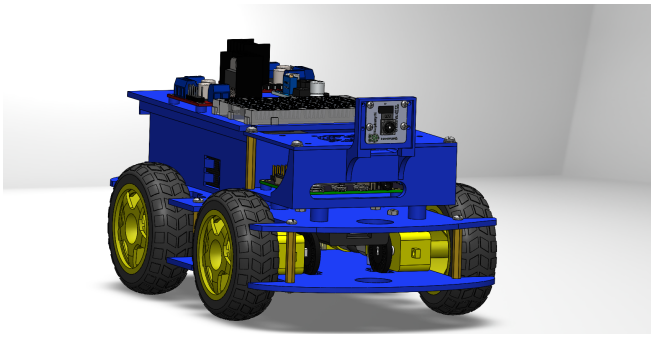

Figure 1: Solidworks Design

B. Hardware Components

Table I shows the components used to build the used vehicle.

C. Circuit Diagram

Figure 2 shows the circuit diagram used in our vehicle.

Table I: Hardware Components Table

Component	Quantity	Price(EGP)	Where to buy
Raspberry PI 5 Model B 8GB	1	6300	Most Electronics
Power Bank	1	2800	Xiaomistore
Micro-Servo Motor	1	90	Makers Electronics
DC Gear Motor With Encoder	1	475	Ampere Electronics
Jumper Wires	20 or more	50	Future Electronics
Vehicle	1	1500	3D-Printed
Raspberry PI Camera	1	800	Future Electronics
IMU 6050 Sensor	1	650	Ampere Electronics
Breadboard	1	35	Ampere Electronics
L-298 H-bridge	1	70	Ampere Electronics

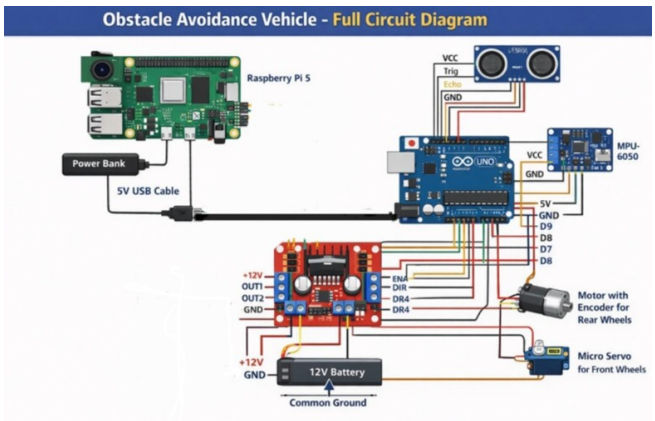

Figure 2: Electric circuit diagram

IV. Simulation Results

V. Conclusion

References

[1] S. Fernandes, D. Duseja, and R. Muthalagu, "Application of image processing techniques for autonomous cars," *Proceedings of Engineering and Technology Innovation*, vol. 17, p. 1, 2021.

[2] X. Chen, Y. Liu, and K. Achuthan, "Wodis: Water obstacle detection network based on image segmentation for autonomous surface vehicles in maritime environments," *IEEE Transactions on Instrumentation and Measurement*, vol. 70, pp. 1–13, 2021.

[3] X. Zhao, H. Wu, Z. Xu, and H. Min, "Omni-directional obstacle detection for vehicles based on depth camera," *IEEE Access*, vol. 8, pp. 93 733–93 748, 2020.

[4] T. Vojir, T. Šipka, R. Aljundi, N. Chumerin, D. O. Reino, and J. Matas, "Road anomaly detection by partial image reconstruction with segmentation coupling," in *Proceedings of the IEEE/CVF international conference on computer vision*, 2021, pp. 15 651–15 660.

[5] B. Hariprasanna and S. V. S. Devi, "Applying nature-inspired optimization: Ant and bee colony approaches for enhanced edge detection in image processing," in *2025 Third International Conference on Augmented Intelligence and Sustainable Systems (ICAISS)*. IEEE, 2025, pp. 160–165.